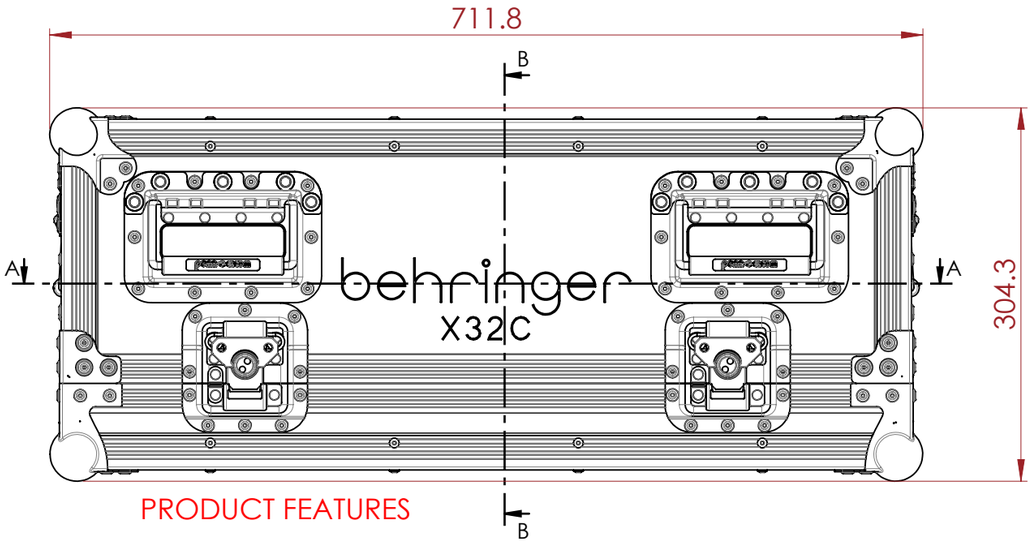

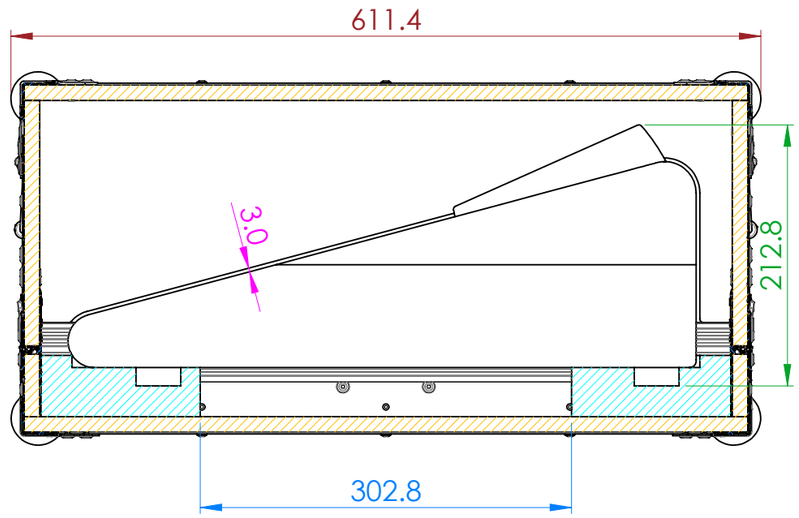

SECTION B-B

NOTES:

UNLESS SPECIFIED IN THE DRAWING, ALL PRODUCTS DISPLAYED IN THIS DRAWING OTHER THAN THE CASE ITSELF IS NOT PART OF OUR PRODUCT OFFERING.

- CARPET
- EVA FOAM
- PLYWOOD
- EXTERNAL DIMENSIONS
- INTERNAL DIMENSIONS
- TOLERANCES
- EQUIPMENT DIMENSIONS
- EPE 25 FOAM

PRODUCT FEATURES

CONSTRUCTION
- 12MM LAMINATED PLYWOOD PANEL
- EVA FOAM PROTECTION
- 4 X MEDIUM LATCHES
- 6 X LARGE RECESSED LATCHES

FEATURES
- EASY TO USE LIFT OFF LID DESIGN
- DEDICATED SPACE FOR BEHRINGER X32C AUDIO MIXER
- COMPACT DESIGN
- BALL CORNER AND 30MM EXTRUSION EDGES

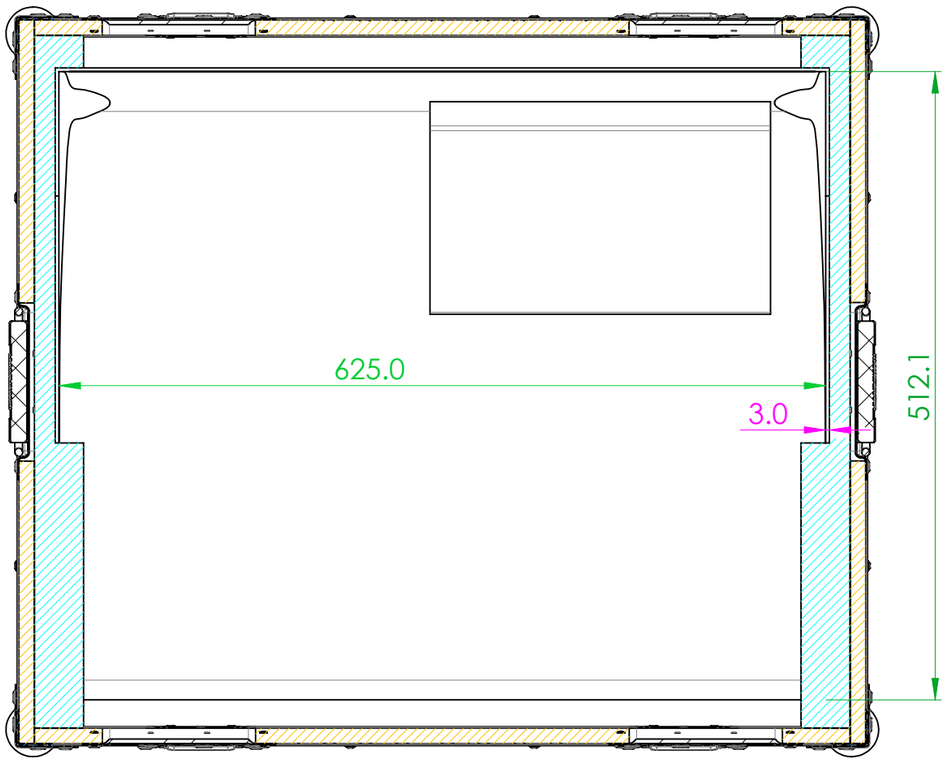

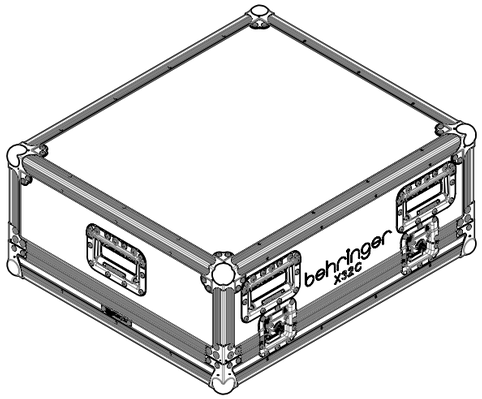

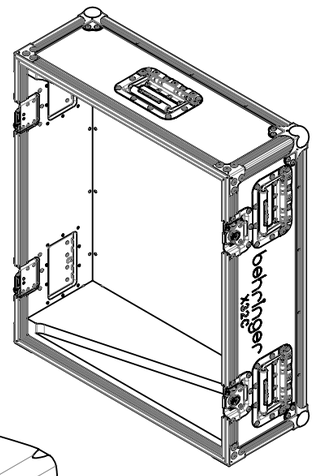

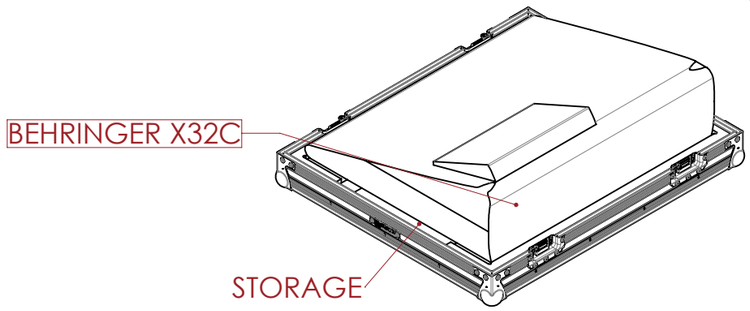

REV	DESCRIPTION	DATE
0	ORIGINAL ISSUE	10/31/2022

ESTIMATED WEIGHT (CASE ONLY):
18.56 KG

ITEM CODE:
MIXR-BEH-X32C

DRAWN BY: HA

CHECKED BY: AS

SCALE: NTS

ARMOR
BUILT TO PROTECT

MAIL : sales@armorcases.com.au
WEB : www.armorcases.com.au