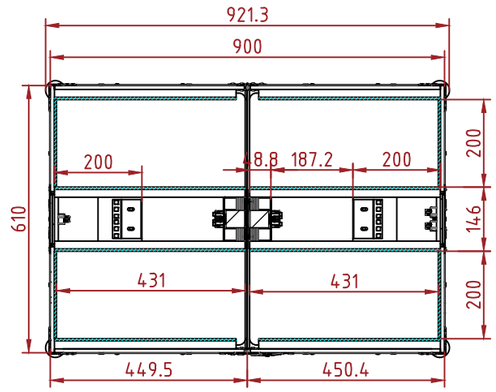

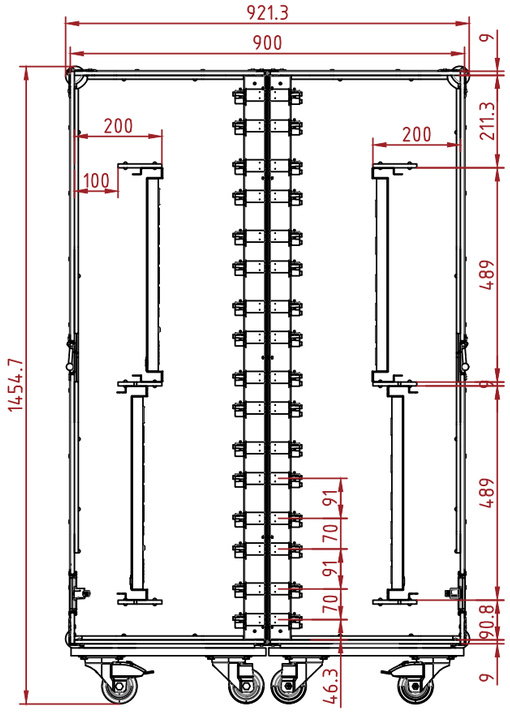

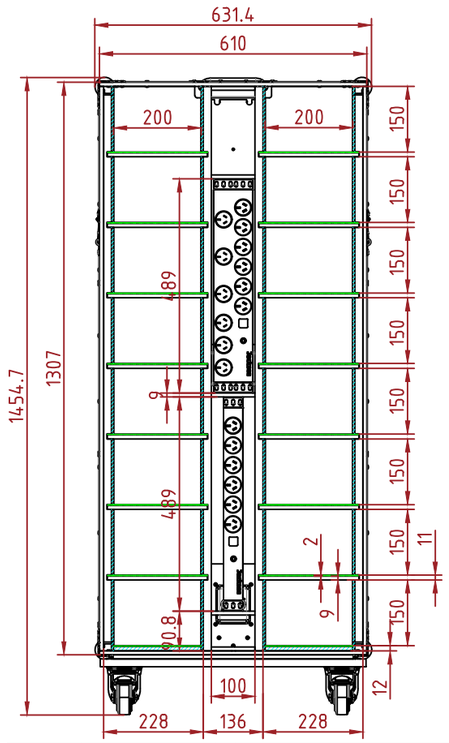

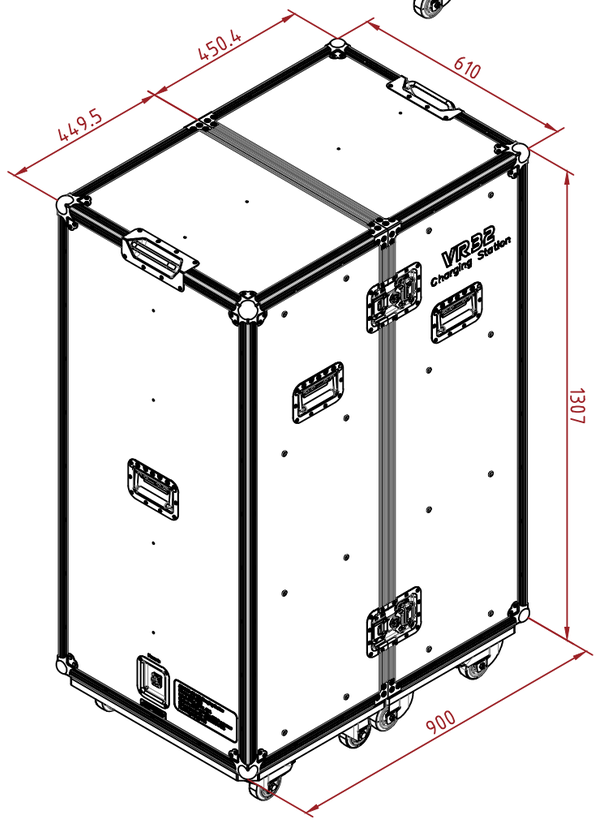

EVA FOAM

CARPET

ITEM NO.	DESCRIPTION	PART NUMBER	QTY.
1	BRACES	B4501	8
2	BALL CORNERS	C3102	8
3	LATCHES	L944-527-10MOL3	2
4	RECESSED HANDLE	H1101	6
5	CORNER HANDLE	H0410	2
6	DISHES	D0949	1
7	DISHES	D0947	1
8	PLYWOOD PANEL 9mm	P901A	6
9	PLYWOOD PANEL 18mm	P1801	4
10	SINGLE ANGLE EXTRUSION	E-SA30	3
11	EDGE EXTRUSION	E-E25-T9	2
12	EDGE EXTRUSION	E-E25-G9	2
13	PIANO HINGE	P-38	1
14	CASTOR	W0990-80	4
15	CASTOR	W0985-80	4
16	POWERBOARD	JACKSON-1U	2
17	POWERBOARD	JACKSON-2U	2
18	NEUTRIK POWERCON IN		2
19	NEUTRIK POWERCON OUT		1
20	PD CHARGER 30W		32
21	AS/NZS 3112 AC POWER CORD		32
22	LOW PROFILE SOCKET HEAD SCREW M6X25mm		32
23	SLEEVE NUT M6		32
24	HEX BOLT M8X25mm		20
25	HEX BOLT M8X35mm		16
26	TEE NUT M8		38

NOTES:

CUSTOMER: Gippsland Tech School

DUE DATE: February 1, 2022

QUANTITY: 1

PANEL FINISH: P901A

HARDWARE: MATT

DRAWING: CS-VR Case

DRAWN BY: RP

CHECKED BY: AS

SCALE: NTS

REVISION: 0

ARMOR
BUILT TO PROTECT

ADD : 45/7-9 Percy St,Auburn,
NSW 2144, Australia
PH : 02 9188 6801
MAIL : sales@armorcases.com.au
WEB : www.armorcases.com.au